Use relay module to control LED module

Table

1. Understand SRD relays 2

1.1 Definition and Function of Relays 2

1.2 Detailed explanation of working principle 2

1.3 Main parameters 2

2. Introduction of Cokoino relay module 3

2. What do you need to prepare 5

3. Wiring Circle 6

4. Open the test code 8

5. Upload the code and test 10

6. Code 11

7. Any questions and suggestions are welcome 12

1. Understand SRD relays

1.1 Definition and Function of Relays

A relay is essentially an electronic control device, featuring a control system (input circuit) and a controlled system (output circuit). In automatic control circuits, a relay acts like an "automatic switch", utilizing a small current to control a larger current, thereby achieving functions such as automatic circuit regulation, safety protection, and circuit switching. For instance, in household circuits, a relay can automatically control the start and stop of air conditioning based on signals from temperature sensors, achieving automatic temperature regulation. In industrial production, relays can monitor and protect the operating status of motors. When faults such as overload or short circuit occur in the motor, the circuit is promptly cut off to prevent equipment damage.

1.2 Detailed explanation of working principle

The SRD series relays belong to electromagnetic relays, and their working principle is based on the law of electromagnetic induction. When a certain voltage is applied to both ends of the relay coil, a certain current will flow through the coil, thereby generating electromagnetic effects. At this point, the iron core is magnetized, generating a strong electromagnetic force that attracts the armature to overcome the pulling force of the return spring and approach the iron core. The movement of the armature drives the moving contact connected to it, causing it to engage with the stationary contact (normally open contact), thereby achieving circuit conduction. When the coil is powered off, the electromagnetic force disappears, and the armature returns to its original position under the action of the return spring. The moving contact and the stationary contact (normally closed contact) are disconnected, and the circuit is cut off accordingly.

Taking the common SRD-05VDC-SL-C relay as an example, when the coil is connected to a 5V DC voltage, the magnetic field generated by the coil current causes the armature to move and the normally open contact to close, which can be used to control the on/off of external load circuits. This working method of opening and closing contacts through electromagnetic force enables relays to respond quickly and reliably to control signals, and is widely used in various automatic control circuits.

1.3 Main parameters

Coil voltage: refers to the voltage value required to be applied to the coil when the relay is working normally. The common SRD series relay coil voltage has various specifications such as 3V, 5V, 6V, 9V, 12V, 24V, etc., which need to be selected according to the actual power supply voltage of the circuit. For example, in projects based on Arduino development boards, selecting an SRD relay with a coil voltage of 5V can achieve direct control without the need for additional level conversion circuits, as its digital output pins are typically at 5V level.

Contact load: Refers to the maximum current and voltage that relay contacts can withstand. For example, the contact load of a certain SRD relay is labeled as "10A 250VAC", which means that the contacts of the relay can safely switch 10A current under AC 250V voltage. When selecting a relay, it is important to ensure that the load current and voltage in practical applications do not exceed the rated value of the contact load, otherwise it may cause contact erosion, adhesion, and affect the service life and reliability of the relay.

Contact resistance: refers to the resistance value between the contacts of a relay when they are closed. Generally speaking, the smaller the contact resistance, the better. A smaller contact resistance can reduce power loss and heat generation during contact conduction. The contact resistance of SRD series relays is usually below 100m Ω, which can meet the low-power requirements of most circuits. Pull in time and release time: Pull in time refers to the time required from the application of rated voltage to the coil to the complete closure of the contacts; The release time refers to the time required from cutting off the coil voltage to completely disconnecting the contacts. These two parameters reflect the response speed of the relay. For some application scenarios that require high timeliness of control signal response, such as high-speed data acquisition systems, precision control systems, etc., it is necessary to choose relays with shorter suction and release times. The suction time of SRD series relays is generally within 8ms, and the release time is within 5ms, which can meet the speed requirements of most conventional applications.

2. Introduction of Cokoino relay module

The Cokoino relay module uses SRD-05VDC-SL-C relay, which adds a drive circuit, indicator lights, and wiring terminals.

The Cokoino relay module is shown in the following figure:

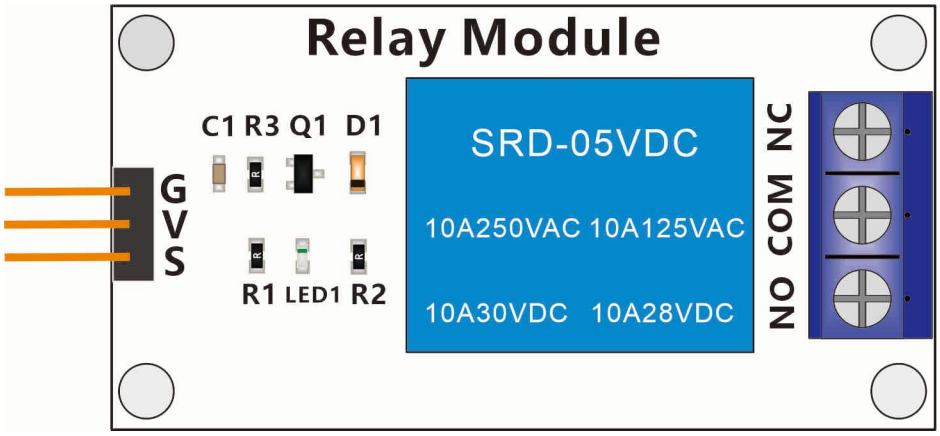

The working voltage of this module is 5V, which is compatible with the logic levels of most microcontrollers (such as Arduino, STM32, etc.) and can be directly controlled by the digital output pins of the microcontroller. This course uses the digital pin signals of the Arduino UNO R3 board to control this relay module.
Contact load: capable of safely switching 10A current signals under AC voltage of 250V; At a DC voltage of 30V, it can safely switch a current signal of 10A.
G, V and S pins are the input pins of the module, usually connected to a microcontroller. In this course, the G, V, and S pins of the module are respectively connected to the GND, 5V, and digital signal pins of the Arduino UNO R3 board.

The NO, COM, and NC terminals are the output terminals of this module. NO is the normally open terminal, COM is the common terminal, and NC is the normally closed terminal. NO and COM form a normally open switch, while NC and COM form a normally closed switch. When a 5V high-level voltage signal is input to the S pin, NC and COM are disconnected and NO and COM are closed. The circuit schematic is as follows:

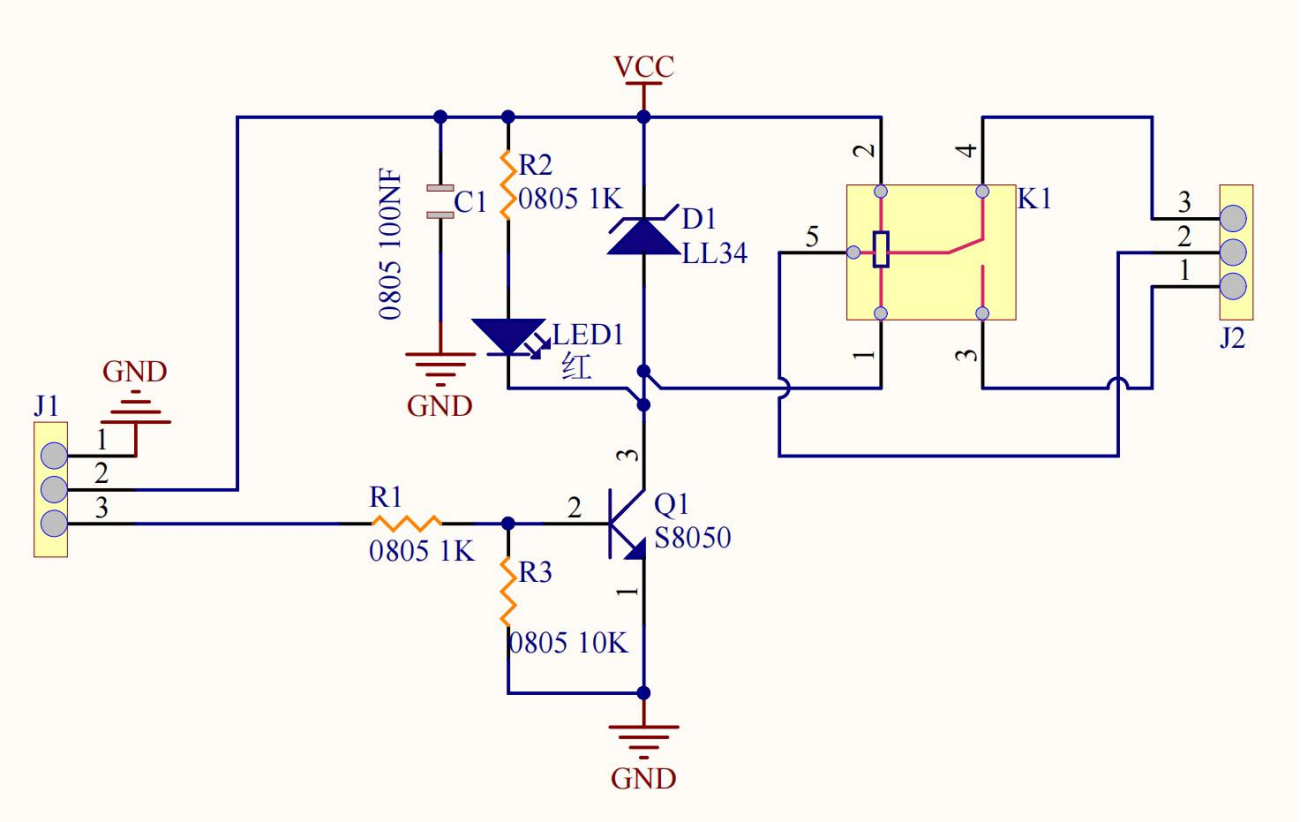

Usage of Cokoino Relay Module

Control circuit connection: Connect the VCC pin of the relay module to the positive pole of the control power supply, and connect the GND pin to the negative pole of the control power supply. For modules that require external control signals, connect the control signal source (such as the digital output pin of the microcontroller) to the IN pin of the module. During the connection process, attention should be paid to whether the voltage of the control power supply matches the operating voltage of the module, and whether the level of the control signal meets the triggering requirements of the module. For example, in this Lesson, the Arduino UNO R3 is used as the microcontroller. The VCC pin of the relay module should be connected to the positive terminal of the 5V power supply of UNO R3, the GND pin of the relay module should be connected to the GND of UNO R3, and the IN pin should be connected to the digital signal pin of UNO R3.

Load circuit connection: According to actual control requirements, connect one end of the load circuit to the COM pin of the relay module and the other end to the positive pole of the power supply (for AC loads, connect to the phase line of the AC power supply). If it is necessary to control a normally open load, connect the other end of the load to the NO pin; To control a normally closed load, connect it to the NC pin. For example, when controlling a 220V AC light bulb, connect one end of the bulb to the COM pin of the module, the other end to the 220V AC live wire, and then connect

the NO pin of the module to the 220V AC neutral wire. This way, when the relay is closed, the bulb can light up normally.

This Lesson uses the cokoino relay module and UNO R3 to turn on and off LED lights.

2. What do you need to prepare

Components	Quantity	Picture	Remark
A to B USB cable	1		
Arduino UNO R3	1	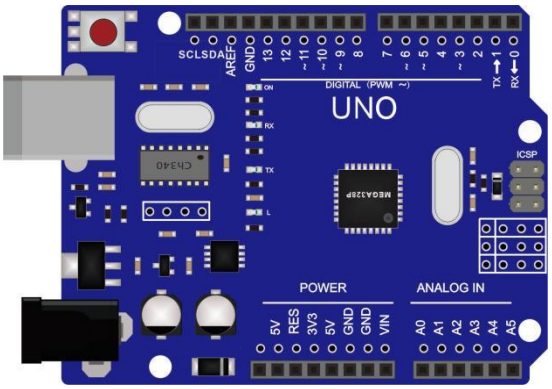	
Expansion board for Arduino UNO	1	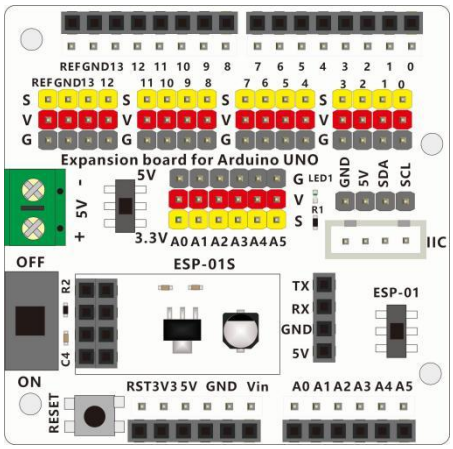	
Relay Module	1	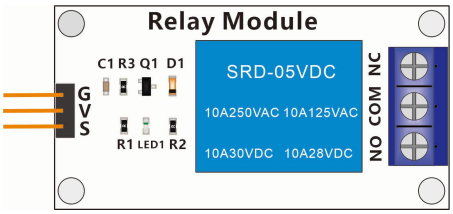	

Green LED Module	1	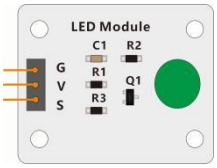	
3Pin Female to female dupont wire(Black, red, yellow)	1		Length 150mm
2Pin Female to female dupont wire(Black, red)	1		Length 150mm
1Pin Female to male dupont wire(yellow)	1		Length 150mm
1Pin Female to male dupont wire(green)	1		Length 150mm

3. Wiring Circle

Insert the Arduino UNO expansion board onto the Arduino UNO R3 board, paying attention to the assembly direction.As shown in the following figure:

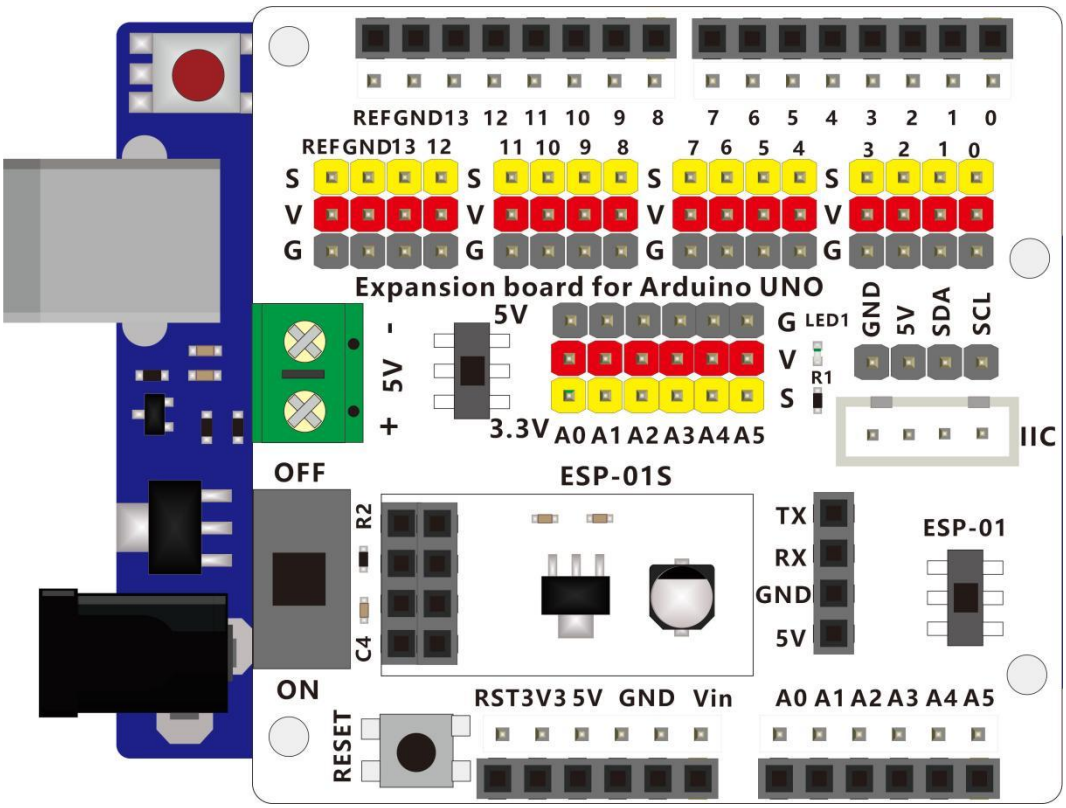

Turn the power switch on the expansion board to ON side and the 5V/3.3V switch to 5V side.
Connect the relay module to the Arduino UNO Expansion board using the 3Pin Female to female dupont wire(Black, red, yellow).
Connect the green led module S pin to NO pin of the relay module.
Connect the green led module V pin to V pin of the Arduino UNO Expansion board.
Connect the green led module G pin to G pin of the Arduino UNO Expansion board.
Connect the relay module COM pin to 12 pin of the Arduino UNO Expansion board.
Connect the Arduino UNO to the computer via a A to B USB cable.

Wiring between the relay module and the Arduino UNO expansion board		
pins of relay module	pins of the expansion board	Connection wire
G	G	3Pin Female to female dupont wire(Black, red, yellow),Length 150mm
V	V	
S	9	
COM	12	1Pin Female to male dupont wire(green),Length 150mm

Wiring between the green led module and the Arduino UNO expansion board		
pins of the green led	pins of the expansion board	Connection wire

G	G	2Pin Female to female dupont wire(Black, red),Length 150mm
V	V	

Wiring between the green led module and the relay module		
pins of the green led	pins of the relay module	Connection wire
S	NO	1Pin Female to male dupont wire(yellow),Length 150mm

The hardware connection diagram is as follows:

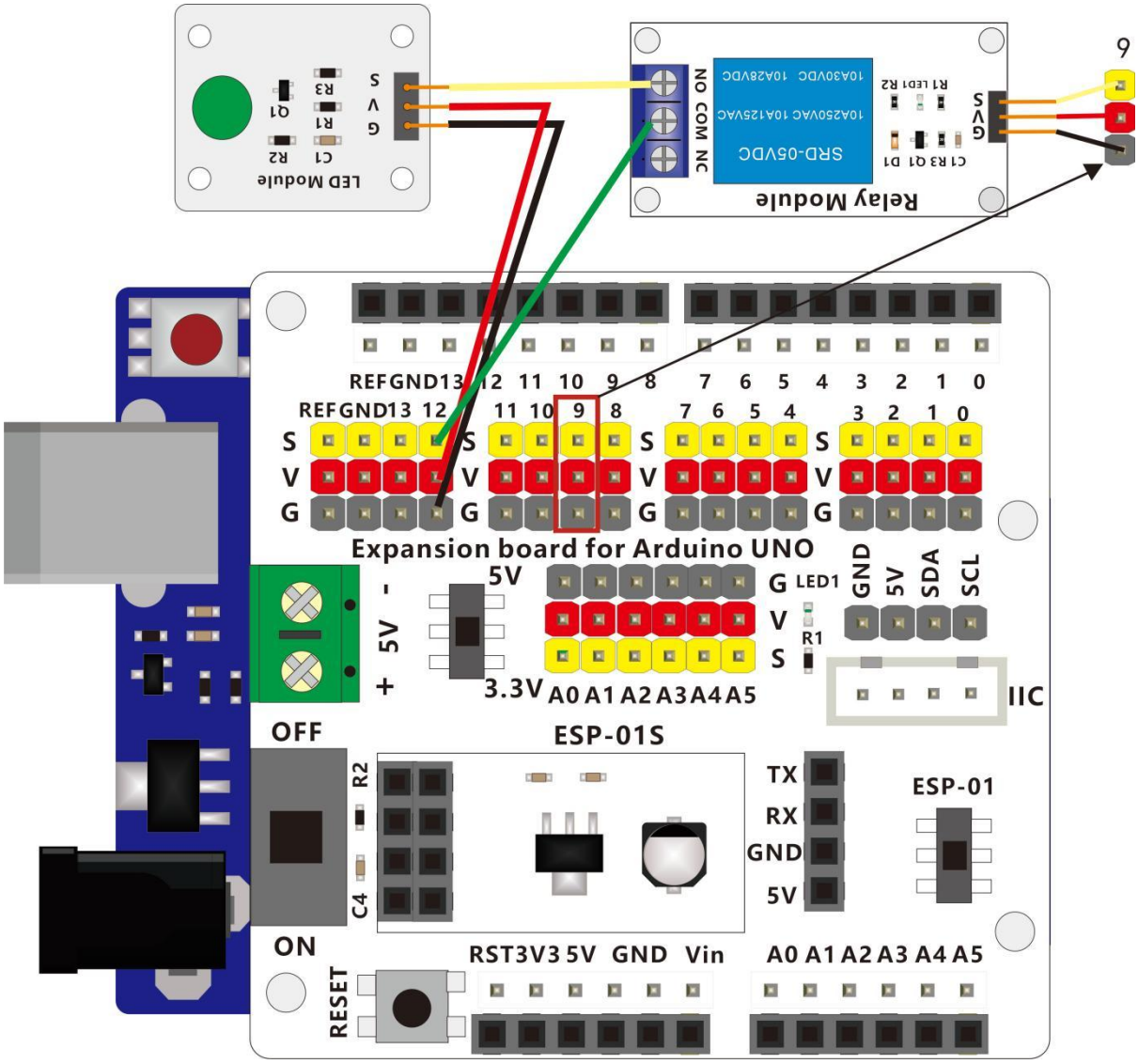

4. Open the test code

The code used in this lesson is placed in this folder：“ E:\CKK0021-main\Tutorial\sketches”

5_1_relay_control_led

Double-click the Arduino IDE shortcut on the desktop to open it

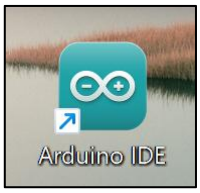

Click "File" --- "open"

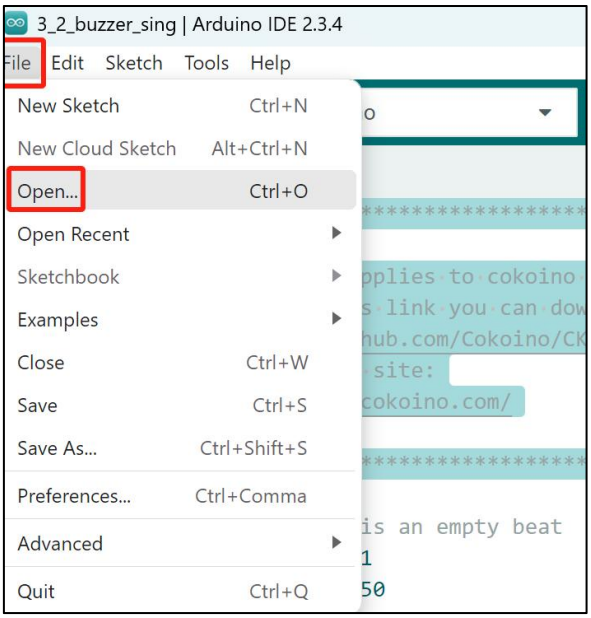

Select the code in the folder named 5_1_relay_control_led:
E:\CKK0021-main\Tutorial\sketches\5_1_relay_control_led, Then click "open".
The code interface after opening is as follows

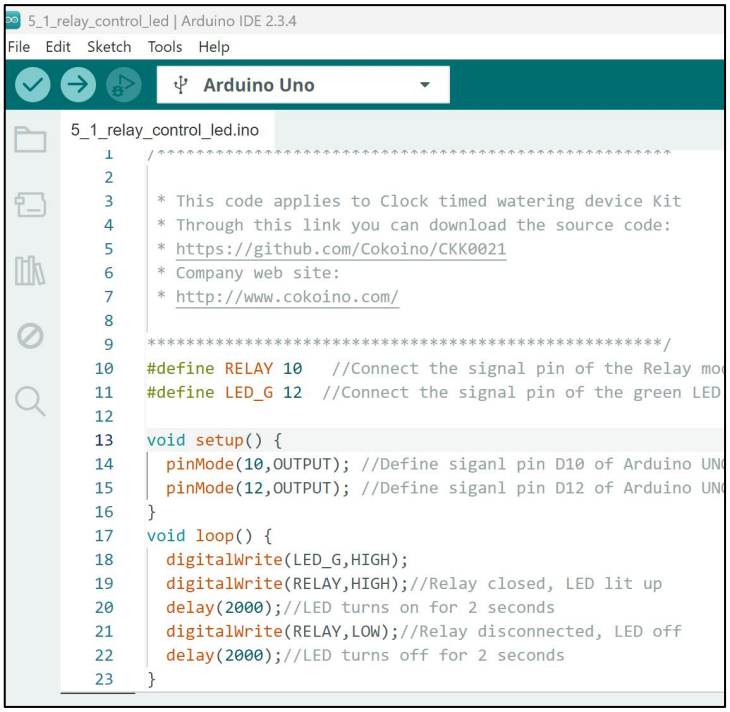

Select the board "Arduino UNO"and Port "COM10" (COM port is commonly known as an input output port for a device normally PC which enables communication between Arduino and PC. You can check your arduino com number in device manager, the com port of our arduino board is recognized as COM10 in this tutorial)

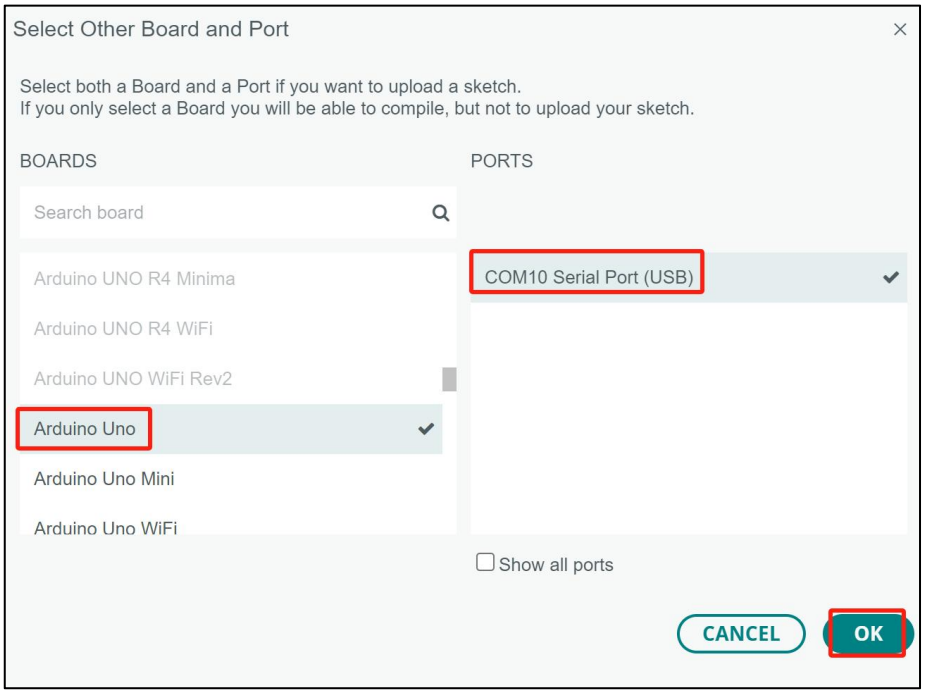

5. Upload the code and test

Click compile button，successfully compiled the code will display "Done compiling"

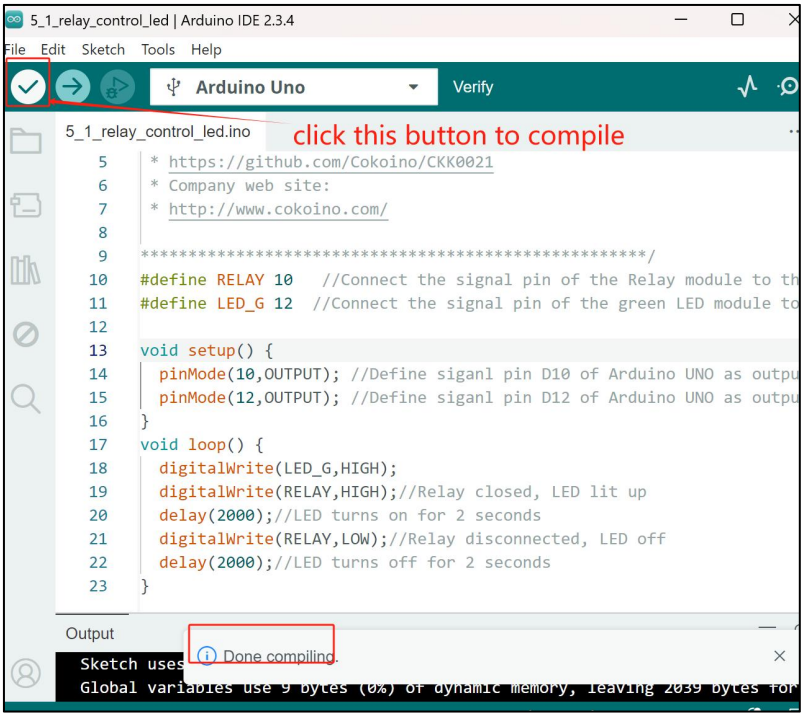

Click upload button, successfully uploading the code will display "Done uploading". When code is uploaded successfully, the program starts to run.

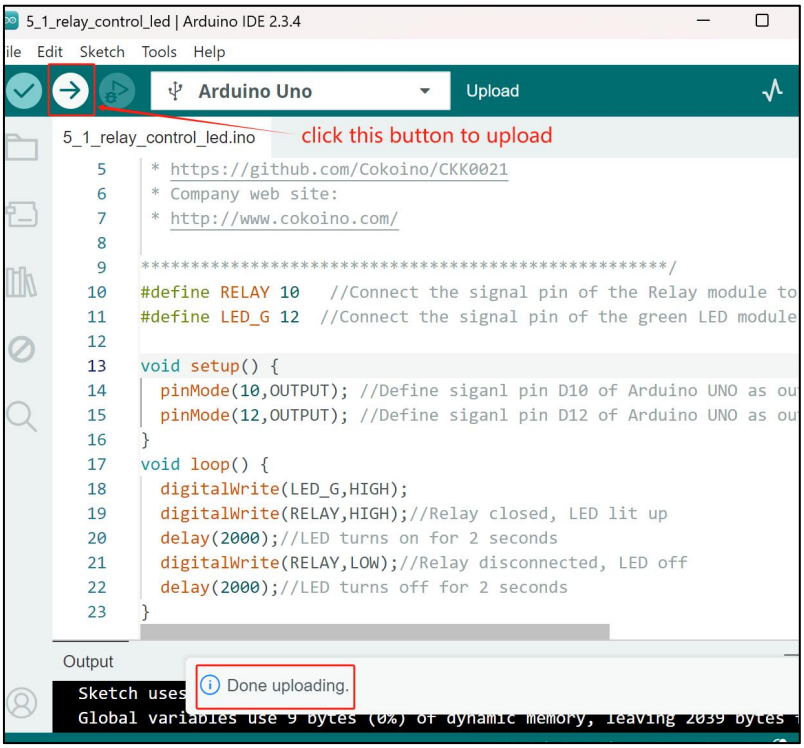

You can hear the sound of "beep", which is the sound of the relay closing. At this point, the green LED light will turn on and hold for two seconds, then you will hear a "click" sound. At this point, the green LED light will turn off and hold for two seconds. Continuing this cycle, after unplugging the USB cable, the relay module stops working.

6. Code

5_1_relay_control_led.ino

```
#define RELAY 10     //Connect the signal pin of the Relay module to the D10 pin of the Arduino UNO
#define LED_G 12   //Connect the signal pin of the green LED module to the D12 pin of the Arduino UNO
void setup() {
  pinMode(10,OUTPUT); //Define siganl pin D10 of Arduino UNO as output mode
  pinMode(12,OUTPUT); //Define siganl pin D12 of Arduino UNO as output mode
}
void loop() {
  digitalWrite(LED_G,HIGH);
  digitalWrite(RELAY,HIGH);//Relay closed, LED lit up
  delay(2000);//LED turns on for 2 seconds
  digitalWrite(RELAY,LOW);//Relay disconnected, LED off
  delay(2000);//LED turns off for 2 seconds
}
```

7. Any questions and suggestions are welcome

THANK YOU for participating in this Lesson 7 experience!

If you find any errors, omissions or you have suggestions and/or questions about this lesson, please feel free to contact us:

cokoino@outlook.com

We will make every effort to make changes and correct errors as soon as feasibly possible and publish a revised version.

If you want to learn more about Arduino, Raspberry Pi, Smart Cars, Robotics and other interesting products in science and technology, please continue to visit our Amazon Store by search for "**LK COKOINO**" on Amazon. Or visit our official website: **www.cokoino.com**
We will continue to launch fun, cost-effective, innovative and exciting products.

Thank you again for choosing Cokoino products.

LK COKOINO